THRUST BLOCKING

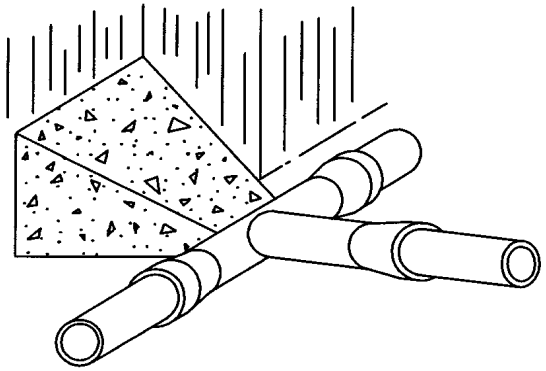

TEE INTERSECTION

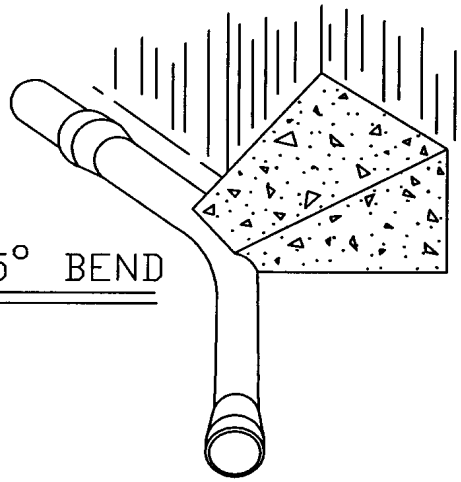

45° BEND

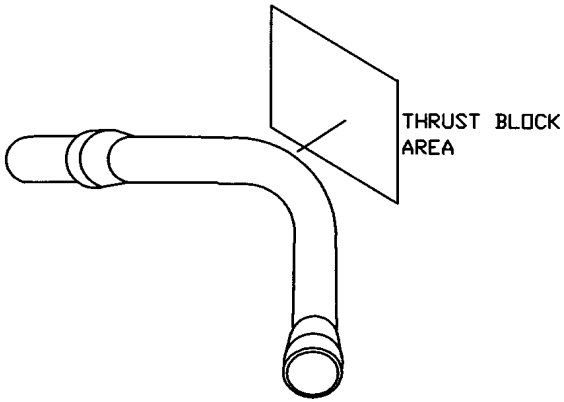

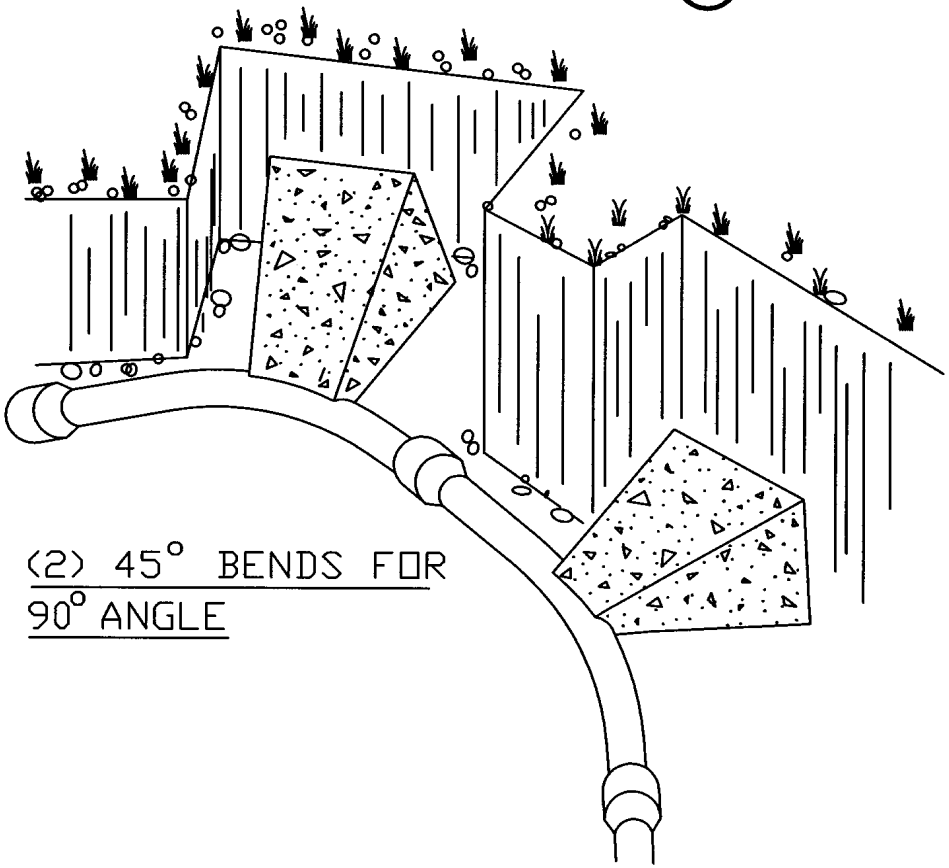

(2) 45° BENDS FOR
90° ANGLE

NOTES:

1. CONCRETE SHALL BE 3000 PSI
2. CONCRETE SHALL NOT CONTACT BOLTS OR ENDS OF MECHANICAL JOINT FITTINGS.
3. TRENCHES SHALL CONFORM TO STANDARD DETAIL S-4 & S-5.
4. SEE STANDARD THRUST BLOCK TABLES, W-10 THRU W-11, FOR AREA OF CONCRETE REQUIRED.
5. ALL BENDS AND INTERSECTIONS SHALL HAVE CONCRETE THRUST BLOCKING.

CITY OF RALEIGH

DEPARTMENT OF PUBLIC UTILITIES

STANDARD THRUST BLOCKING VIEWS

DWG. NO.	REVISIONS	DATE	REVISIONS	DATE
S-7		3-1-87		3-30-00
	D.W.C.	9-7-99	RRH	