IN-GROUND MOUNT

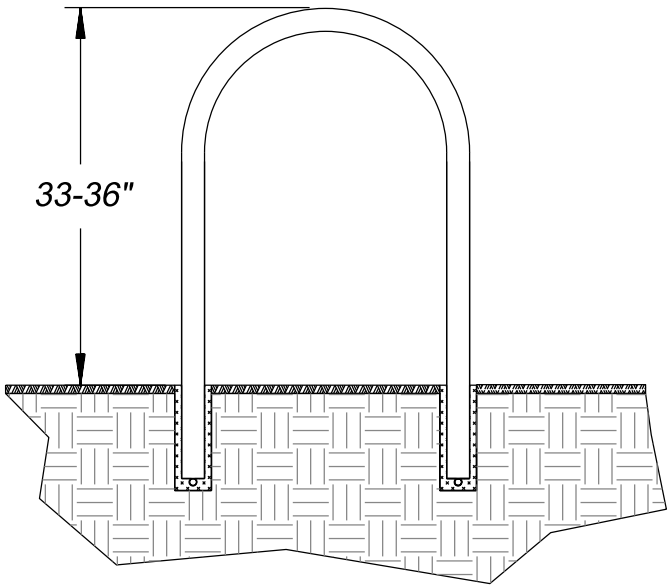

SURFACE MOUNT

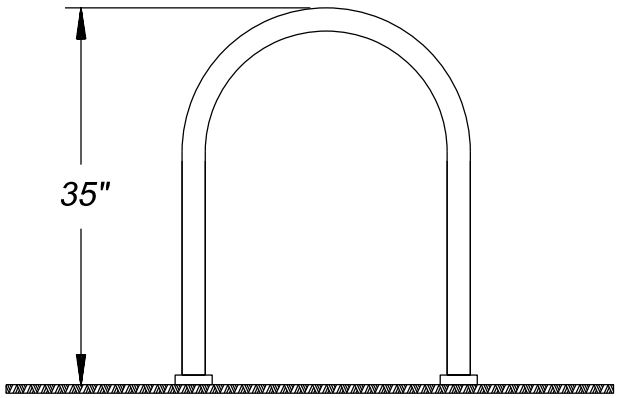

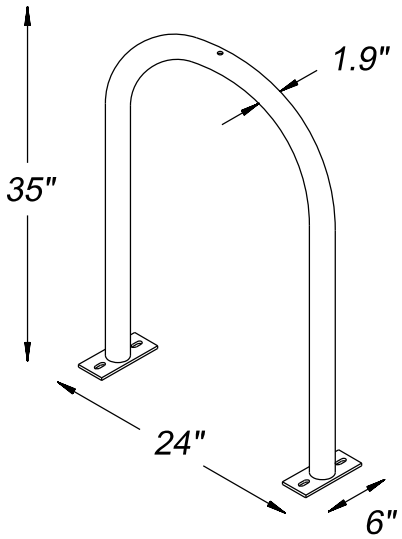

STANDARD BIKE RACK

BIKE RACK INSTALLATION:

SURFACE MOUNT - WHEN INSTALLED ON CONCRETE SURFACE, USE 3/8" ANCHORS TO PLATE MOUNT. SHIM AS NECESSARY TO ENSURE VERTICAL PLACEMENT.

IN-GROUND MOUNT - WHEN INSTALLED ON PAVERS OR OTHER NON-STABLE SURFACES, EMBED INTO BASE. CORE HOLES NO LESS THAN 3" IN DIAMETER AND 10" DEEP.

CITY OF RALEIGH STANDARD DETAIL		
REVISIONS	DATE: 8/2020	NOT TO SCALE
	BIKE RACK DETAILS	
	B-20.03	